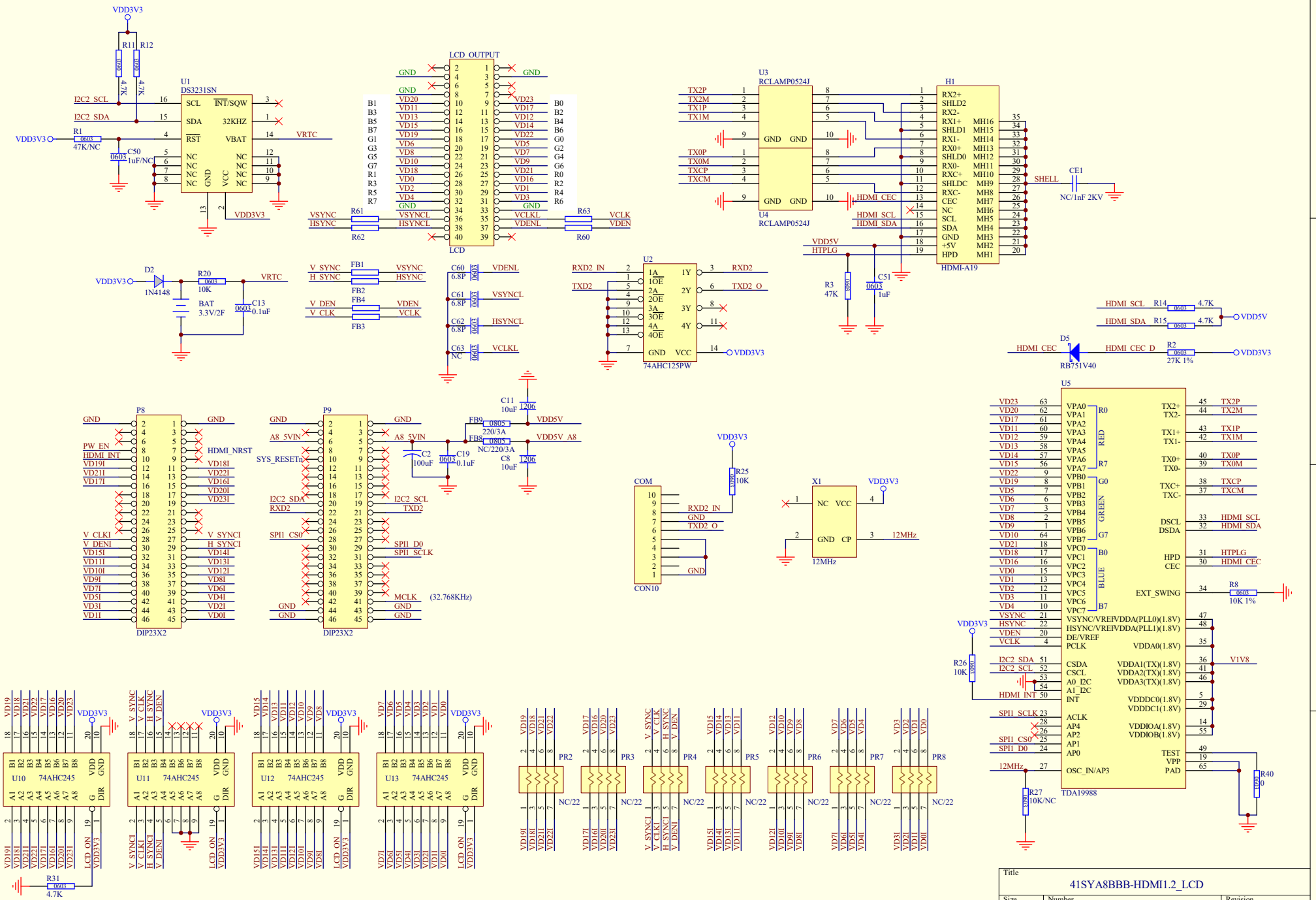

Title
41SYA8BBB-HDMI1.2_LCD

Size	Number	Revision
A3		

Date: 8-Jun-2018 Sheet of
File: C:\PROGRAM FILES\DESIGN EXPLORER 99 SE\EXAMPLES\41SYA8BBB-HDMI12.DDB