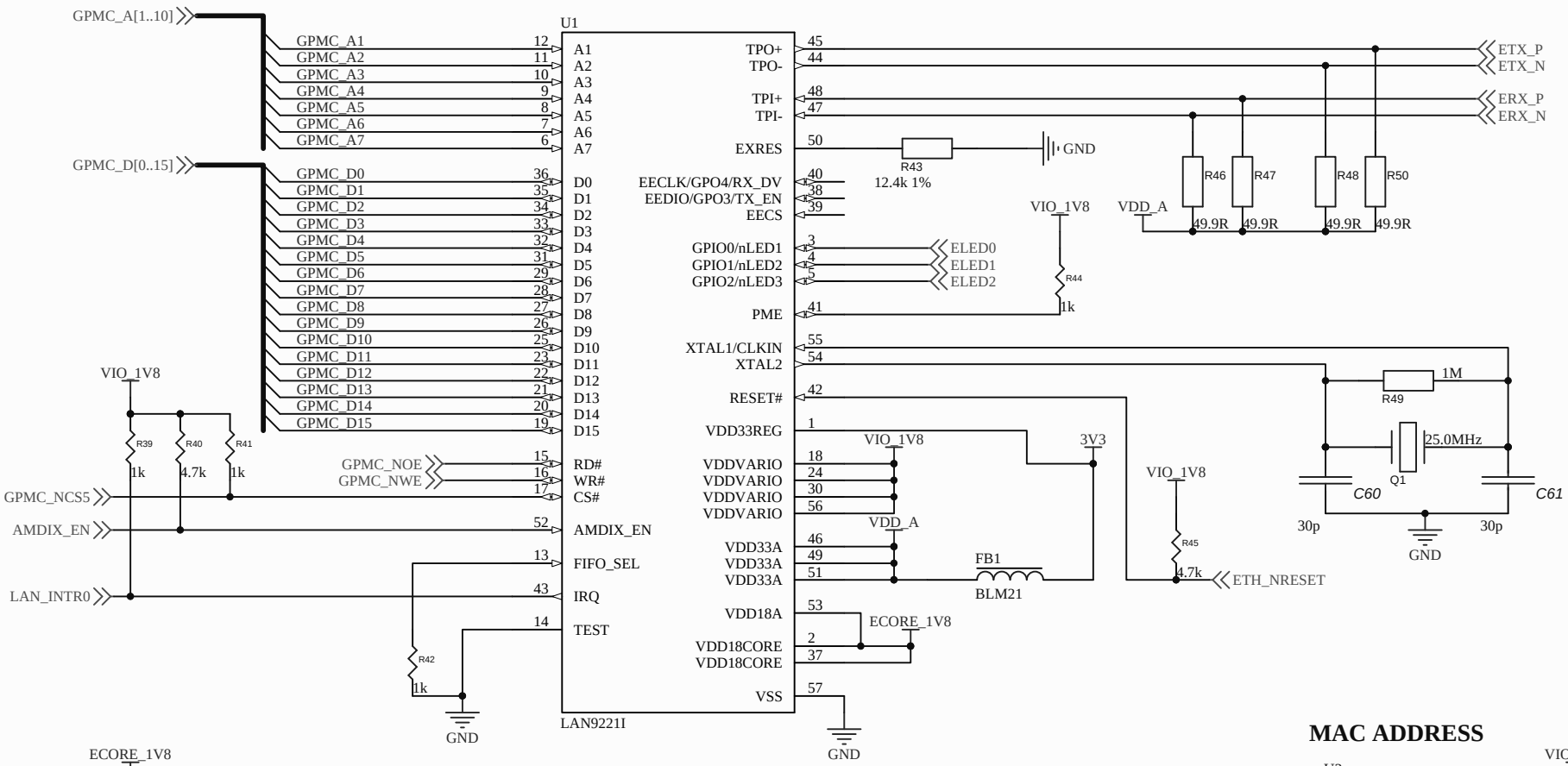

Title		
Size A4	Number	Revision
Date: 12.02.2013		Sheet of
File: G:\Projects\..\ethernet.SchDoc		Drawn By: