07 - NAND

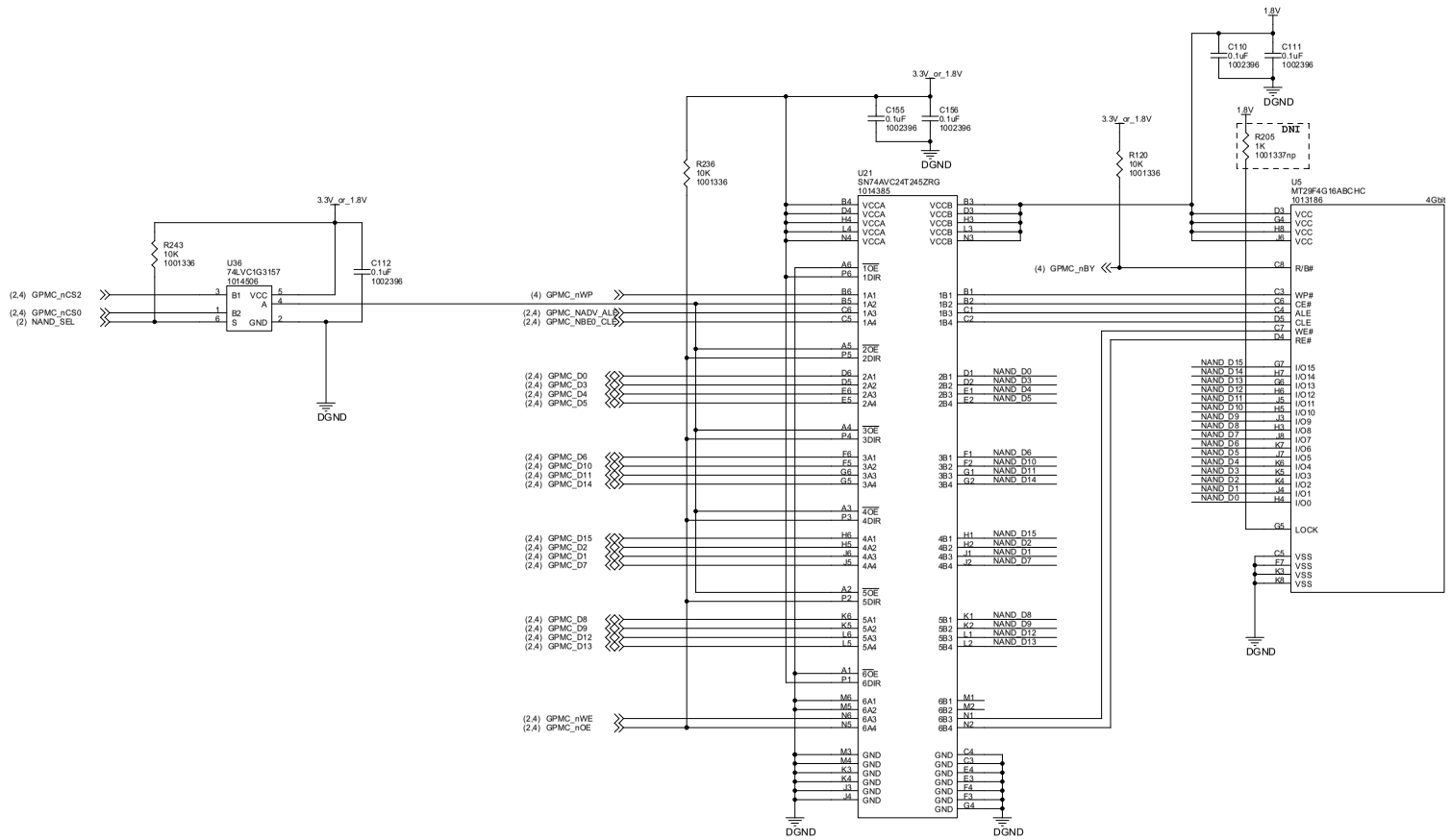

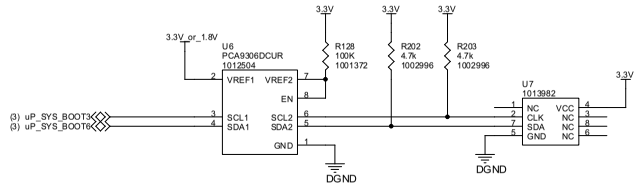

Logic Product Development Confidential

LOGIC PRODUCT DEVELOPMENT		411 WASHINGTON AVE. N MINNEAPOLIS, MN 55401 PHONE: (612) 672-9495 FAX: (612) 672-9489
Title AM3517 SOM		
Size C	Number 1014320	Rev A
Tuesday, December 01, 2009	Project AM3517	Sheet 7 of 12